An-Najah National University

Faculty of Engineering

جامعة النجاح الوطنية

كلية الهندسة

Civil Engineering Department
Mechanics of materials (61207)
Second Exam

Instructor Name:
Academic Year:2013/2014
Semester: Summer
Credit Hours: 3
Date: Monday, July14, 2014
Exam Duration:

Student Name:.....
Registration Number:.....
Serial Number:.....
Section: .....
Total Exam Mark:
Exam Weight: 20

Question	Points	ILO's	ILO's %	Question Grade	Required Time
1	30	1			
2	20	1			
3	30	2			
4	20	2			
Student Grade					

Good Luck

Q1) The torques shown are exerted on pulleys *B*, *C*, and *D*. Knowing that the entire shaft is made of aluminum (*G* = 27 GPa), determine

a) The max shear stress in the system
b) the angle of twist *D with respect to B*.

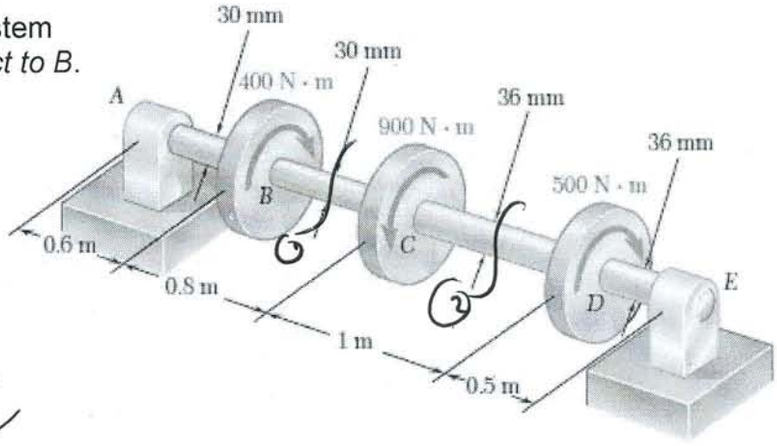

$T_1 = 400\ N\cdot m$ (3)

$J_1 = \frac{\pi (15)^4}{2} = 79521.5\ mm$

$T_2 = 500\ N\cdot m$

$J_2 = \frac{\pi (18)^4}{2} = 164895.9$ (3)

(3)

$\tau_1 = \frac{T_1 \cdot r_1}{J} = \frac{400\,(1000)\,15}{79521.5} = 75.4\ MPa$

(3)

$\tau_2 = \frac{T_2\, r_2}{J_2} = \frac{500\cdot(1000)\,18}{164895.9} = 54\ MPa$

(3)

$\boxed{\tau_{max} = 75.4\ MPa}$

$\phi_1 = \frac{T_1 \cdot L_1}{G J_1} = \frac{(400)(1000)(800)}{(27\times10^3)(79521.5)} = 0.149\ rad$ (5)

$\phi_2 = \frac{T_2 \cdot L_2}{G J_2} = \frac{(500)(1000)(1000)}{(27\times10^3)(164895.9)} = 0.112\ rad$ (5)

$\boxed{\phi_{D/B} = 0.149 - 0.112 = 0.0366\ rad}$ (5)

Q2) Draw the shear force, and the Bending Moment Diagrams for the following Beam.

(20 pts.)

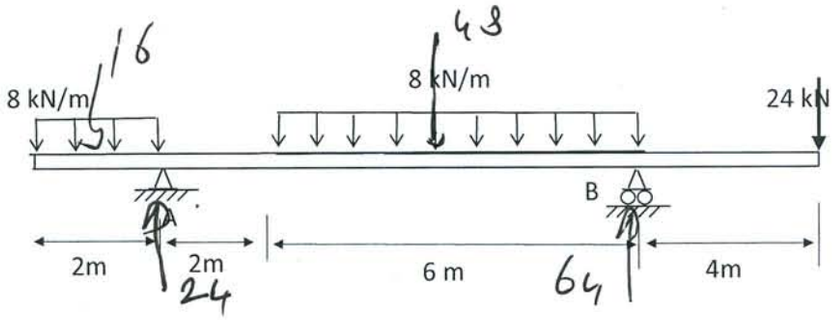

4

$\Sigma M_A = 0 \quad (48)(5) + (24)(12) - R_B \cdot 8 - (16)(4) = 0$

$R_B = 64 \uparrow$

$R_A = 24 \uparrow$

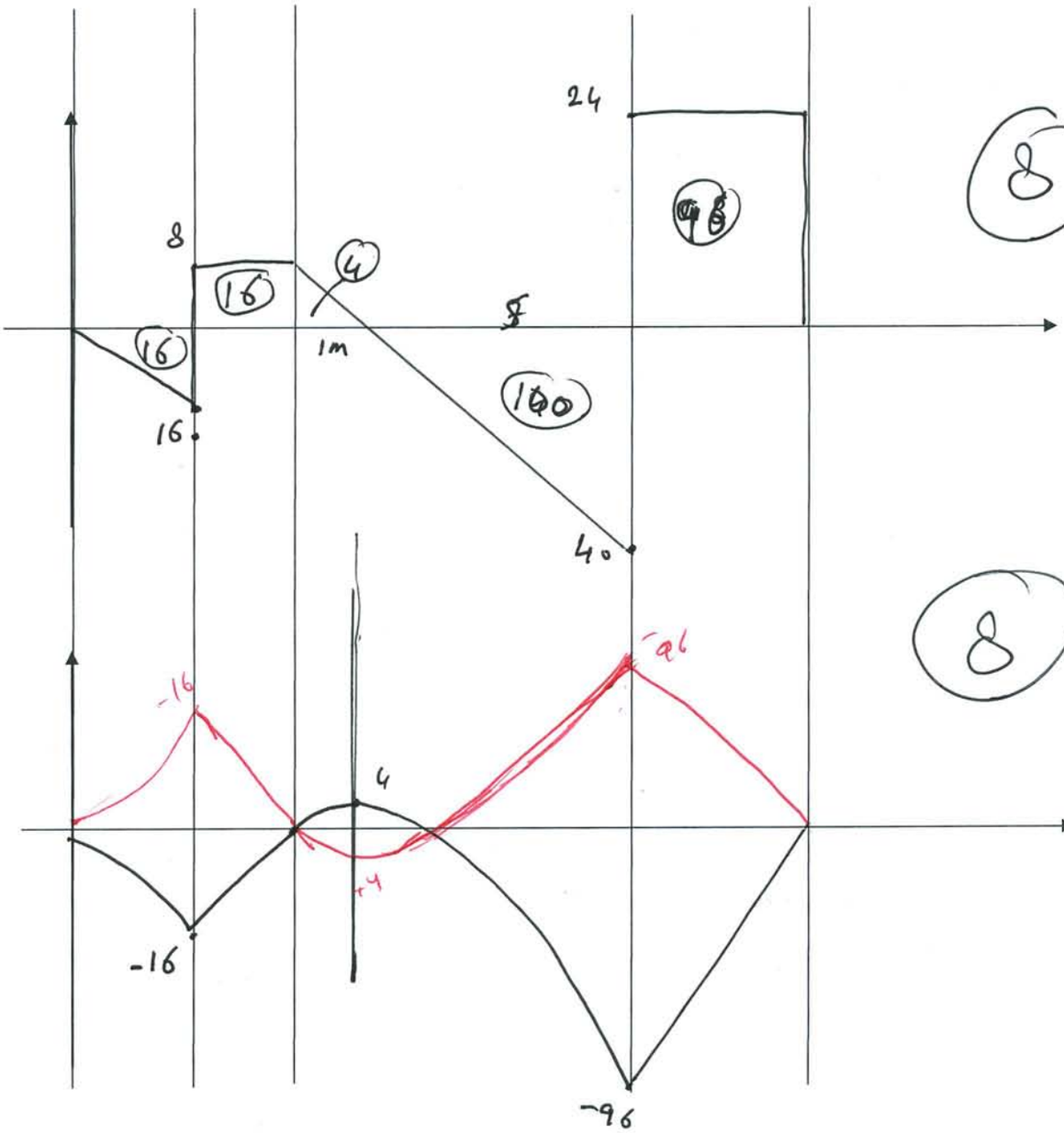

8

8

Q3) using the given beam and cross section, determine

1) The max tensile stress in the section at support B,
2) The max compressive stress in the section between AB

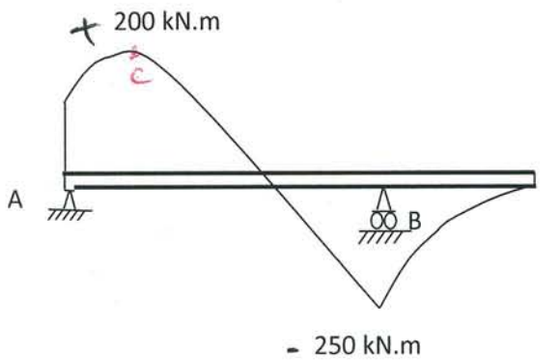

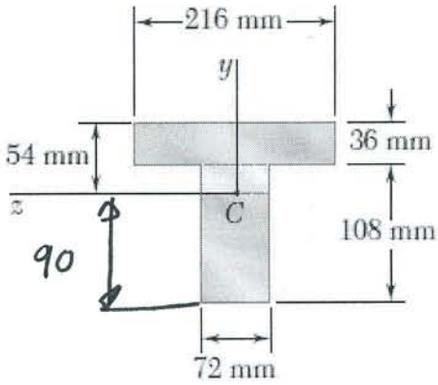

①

$M = -250$

$\sigma = \frac{My}{I}$

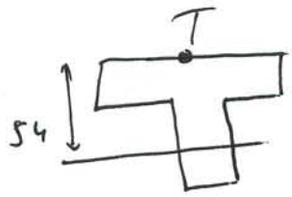

5

$I = 28.55 \times 10^6 \text{ mm}^4$

$\sigma_T = \frac{(250)(10^6) \cdot 54}{28.55 \times 10^6}$

5

$\sigma_c = \frac{200 \times 10^6 \times 54}{28.55 \times 10^6} = 378 \text{ MPa}$

$\boxed{\sigma_T = 472.8 \text{ MPa}}$

5

$M = 200$

$\sigma_c = \frac{My}{I}$

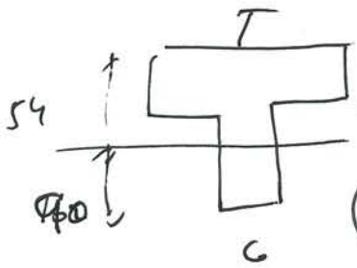

$\boxed{M = 250}$

5

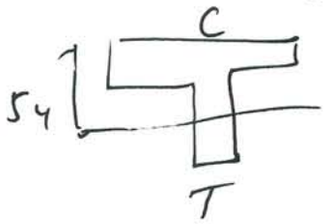

$\sigma = \frac{250 \cdot 10^6 \times 90}{28.55 \cdot 10^6} = 788 \text{ MPa}$

5

5

Q4) For the beam and loading shown, determine (*a*) the equation of the elastic curve for portion BC of the beam, (*b*) the slope at B
EI = 4000 kN.m²

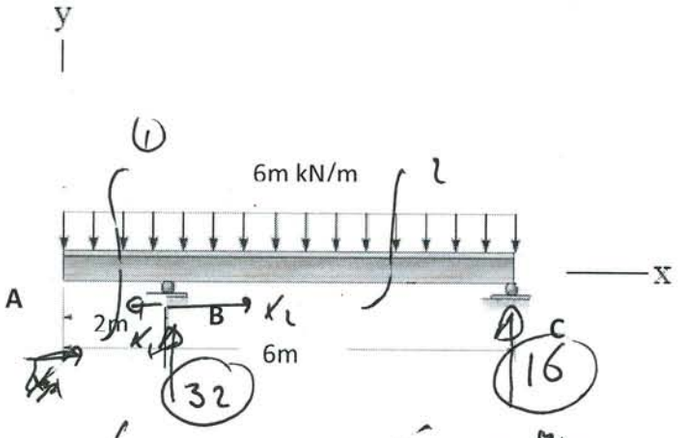

(1)

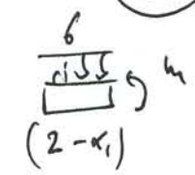

$M_1 = -\frac{6}{2}(2-x_1)^2$

$\boxed{M_1 = -3(2-x_1)^2}$

$-3(4-2x_1+x_1^2)$

$\boxed{M_1 \quad -12+6x_1-3x_1^2}$

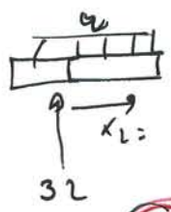

3

$M_2 = -\frac{(6)}{2}(2+x_2)^2 + 32x$

$\boxed{M_2 = 32x - 3(2+x_2)^2}$

$M_2 = 32x - 3(4+2x_2+x_2^2)$

$M_2 = 32x - 12 - 6x_2 - 3x_2^2$

$\boxed{M_2 = -3x_2^2 + 26x - 12}$

5

$\boxed{x_2 = 0 \quad y = 0 \;\Big|\; x_2 = 6 \quad y = 0}$

7

$\theta_2 = \frac{1}{EI}\left[-x_2^3 + 13x_2^2 - 12x_2 + C_1\right]$

$y_2 = \frac{1}{EI}\left[-\frac{x_2^4}{4} + \frac{13}{3}x_2^3 - 6x_2^2 + C_1x + C_2\right]$

$\boxed{C_2 = 0}$ $\boxed{C_1 = 66}$ 5 7

$\boxed{\theta = \frac{C_1}{EI} = \frac{66}{4000} = 0.0165 \text{ rad}}$

3

4

$\boxed{y = \frac{1}{EI}\left[-\frac{x_2^4}{4} + \frac{13}{3}x_2^3 - 6x_2^2 + 66x_2\right]}$